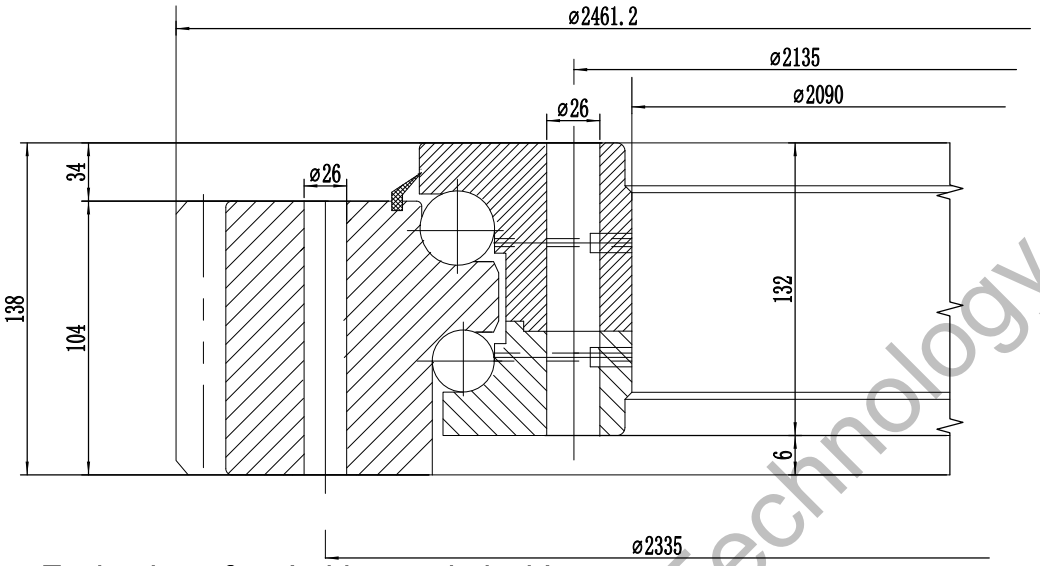

Remark:

1. Luoyang JCB Bearing Technology Co., Ltd is a technical Inc, specialize in designing and manufacturing slewing ring bearing, we can design and manufactur all kinds of slewing bearing according to client's requirement.
2. This drawing is reference for user,if you need formal drawing,please contact wth us sales@jcb-bearing.com, the official drawing will be submitted after order confirmation.

Contact information

Company Address : No. 285, Fenghua road, Luoyang, Henan, China.

Postal code : 471000

Phone : 86-379-68611678 Fax : 86-379-68611679

E-mail: sales@jcb-bearing.com

Reserved E-mail: sales@slewing-ring-bearings.com

Website: www.jcb-bearing.com

www.slewing-ring-bearings.com

1 Axial clearance:min , max ;

2 After assembled C side make mark : 011.35.2220.000.11.1503 and manufacture No.

No.	Items	Qty	Material
09	Bolt M12X45 GB/T70.1		Steel 35-GB/T699
48	Seal		I-3 Oil-resisting rubber
26	second cage		Nylon 1010-HG2-869
06	cage		Nylon 1010-HG2-869
24	second ball		Steel GCr15-GB/T18254
04	ball		Steel GCr15-GB/T18254
02	outer ring		Steel 42CrMo-GB/T3077
21	second inner ring		Steel 42CrMo-GB/T3077
01	inner ring		Steel 42CrMo-GB/T3077

Double Row Different Diameter Ball Slewing Bearing

011.35.2220.000.11.1503

weight(kg)

S 1019

Total 4 page page 1

Luoyang JCB Bearing Technology Co., Ltd

Luoyang JCB Bearing Technology Co., Ltd